Web Guiding Applications and Advanced Web Guiding Concepts - Single Edge Guiding

Blog Post

In 2020 we hosted a webinar on web guiding applications and advanced web guiding concepts as a continuation of the educational series web guiding fundamentals. This webinar was the follow up on our seminar on Web Guiding Fundamentals, presented earlier that year, and commented in a series of blog posts in 2021. We would like to share some comments on the points presented in this webinar in the form of a series of blogs. Hopefully, this will serve as an aid to personnel in the converting industry that are just beginning to deal with web guiding and other related applications.

Edge Guiding - Single Edge

Single edge guiding is the most common guiding application available. In this case, a guiding system employs one sensor located at one of the edges of the web. The sensor will be mounted on either the operator side or the drive (gear) side. It is important that the fundamentals of web guiding are followed in the installation of the sensor in order for it to perform efficiently. The web is guided to the center or middle of the sensor, so the sensor should be positioned to provide enough feedback on the current position of the web to allow for corrections of the web opposition by the web guiding system.

Issues with Single Edge Guiding

Edge guiding applications will work well for most cases. However, it will have issues when the application is faced with web width changes. The sensor might have to be repositioned depending on the sensor range and the amount of change on the width of the web. As the web changes width and the sensor is repositioned, we are faced with a change in distance from the face of the sensor to the plane of the web.

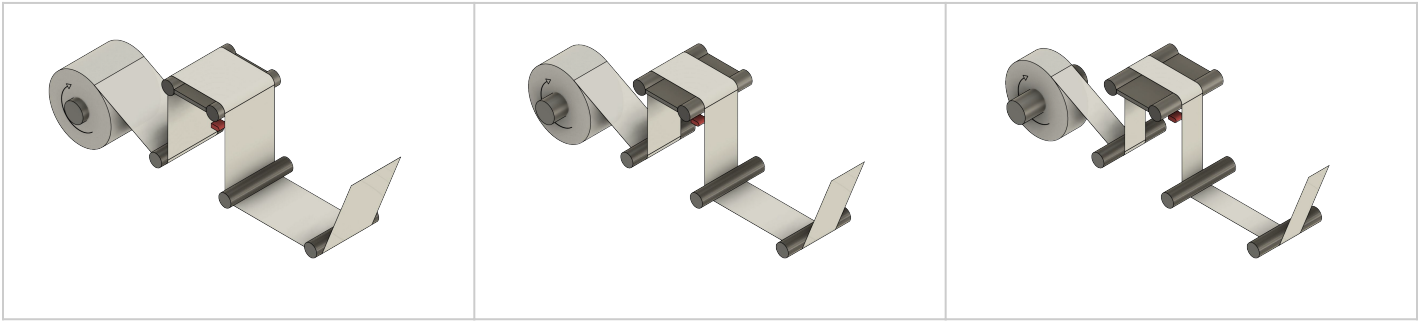

This can cause problems if the web width change is significant as the distance between the sensor face and the web will vary greatly from the narrowest of widths to the widest.

Bear in mind that physical repositioning of the sensor can result in operator error, especially in locating the sensor relative to the machine, or locking it in position. Those are just a couple of situations that can happen. There certainly are more.

There is also the condition in certain converting operations where the web position is not in the center of the machine. In this case, the web is aligned to either the operator side or the drive side:

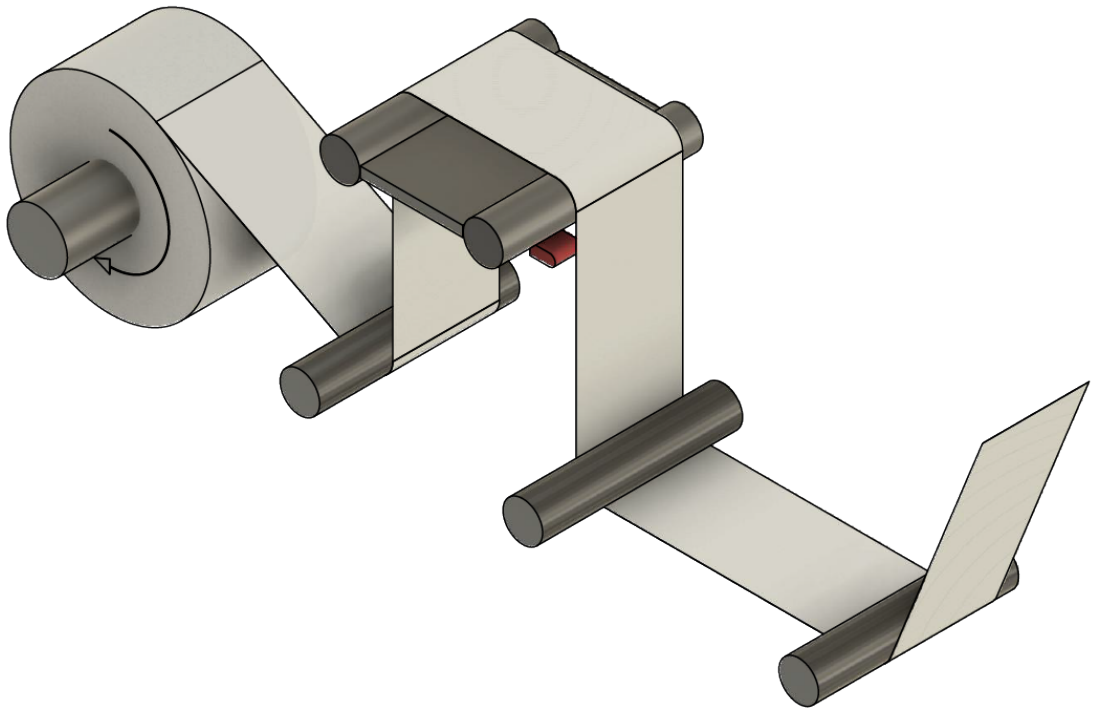

If the alignment of the web is constant on one edge, that is, the edge is fixed in relation to the machine, then you avoid having to reposition the sensor. If it is not, then you will have to deal with sensor repositioning.

We hope this information is of benefit to you and your personnel. We have more articles and videos with information and you can keep up to date on our latest developments and educational materials by signing up for our newsletter. Questions about web guiding and monitoring or web handling in general? Feel free to contact us, we will be happy to help you out with your inquiry.

In our next blog post we will discuss center guiding as a web guiding application. Be on the lookout for this post and other posts that will follow.